# ARTIK 72.075

## Widespread

**Available Finishes**
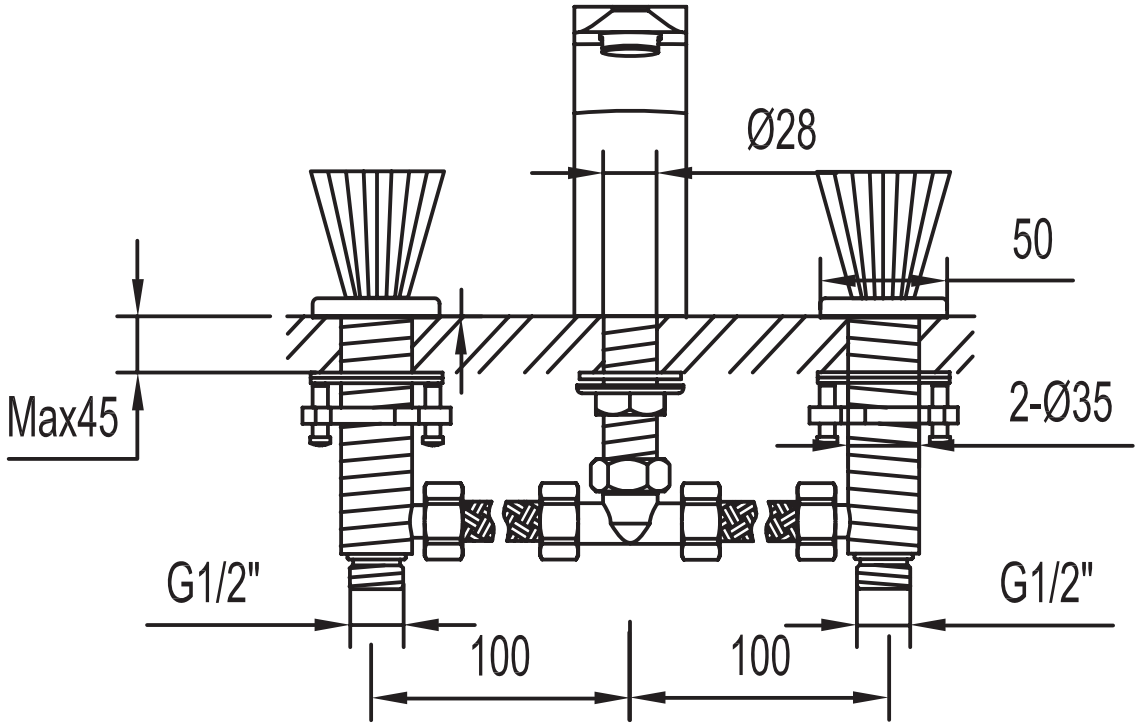
- Chrome
- Gold